RESIDENTIAL GAS-FIRED WATER HEATERS

ATMOSPHERIC

FVIR Compliant

| 30 | 40 | 50 | 60 | U.S. GALLONS

Proudly Canadian

Giant®

Enhancing everyday living

FVIR TECHNOLOGY

All residential gas fired water heaters built with FVIR technology, meet the latest edition of the North American Standards ANSI Z21.10.1/CSA 4.1. They are specially designed to prevent the ignition of flammable vapours such as aerosol sprays, cleaning solvents, gasoline, paints, paint thinner, and thinner lacker, outside of the water heater.

The Power Twist™ baffle increases the heat retention process better than a regular baffle. **You get more hot water from the same gas consumption!**

PATENTED POWER TWIST™ BAFFLE

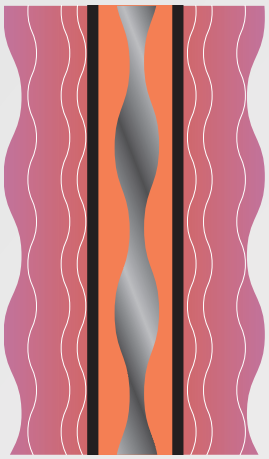

STANDARD BAFFLE

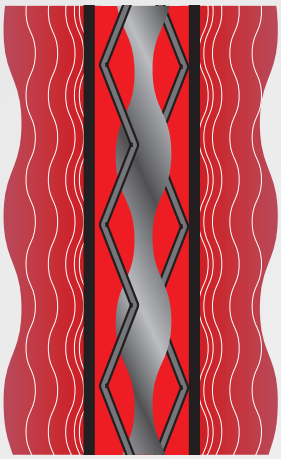

POWER TWIST™ BAFFLE

BENEFITS

1 - STAINLESS STEEL FLAME ARRESTOR
Superior no-rust design prevents flammable vapours from igniting outside of the sealed combustion chamber.

2 - RESETTABLE THERMAL CUT-OFF
Shuts down gas flow to the pilot and burner in the event that flammable vapours enter into the combustion chamber and ignite. Simple and easy to service, push the button to reset.

3 - SIGHT GLASS
Provides easy viewing into the combustion chamber to verify the operation of the pilot and burner.

4 - LOW NO_x BURNER
Environmentally friendly. More efficient combustion resulting in a reduction of air pollution.

5 - PIEZO IGNITER
Makes lighting the pilot easy.

6 - LOW MAINTENANCE OPERATION
Air intakes and flame arrestor designed to minimize dirt and dust accumulation.

7 - DRAIN VALVE
Excellent quality, tamper resistant, one-piece brass drain valve is installed for easy drainage.

8 - INSULATION
A thick uniform blanket of GREENFOAM® eco-friendly insulation keeps the water hotter for longer periods, reduces standby losses and energy costs. GREENFOAM® contains no HCFC'S (hydrochlorofluorocarbons), CFC'S (chlorofluorocarbons), nor VOC's (volatile organic compounds).

9 - PATENTED POWER TWIST™ BAFFLE
Gives a higher efficiency than regular baffles (see figure on the previous page).

10 - FACTORY INSTALLED T&P RELIEF VALVE
Protects the tank from the damaging effects of excessive water temperature and pressure.

11 - FACTORY INSTALLED 3/4" NPT DI-ELECTRIC NIPPLES
Extend the life of the water heater by providing excellent corrosion protection.

12 - GLASS-LINED INNER TANK
A uniquely formulated blue cobalt glass enriched with zircon is fused to specially treated steel at 1,600°F (871°C) to provide the best coating available against corrosion for many years. The tank is certified at a test pressure of 300 PSI (2,068 kPa) and a working pressure of 150 PSI (1,034 kPa).

13 - HIGH-QUALITY MAGNESIUM ANODE
Provides excellent protection against the corrosive effects of water and extends tank life.

14 - AUTOMATIC TEMPERATURE CONTROL
Adjustable thermostat will provide years of reliable trouble-free service at the desired water temperature and an energy cut-off (E.C.O.) is provided for abnormal conditions.

15 - ROLL-AROUND BASE
Provides easy handling for installer without damaging the floor during installation.

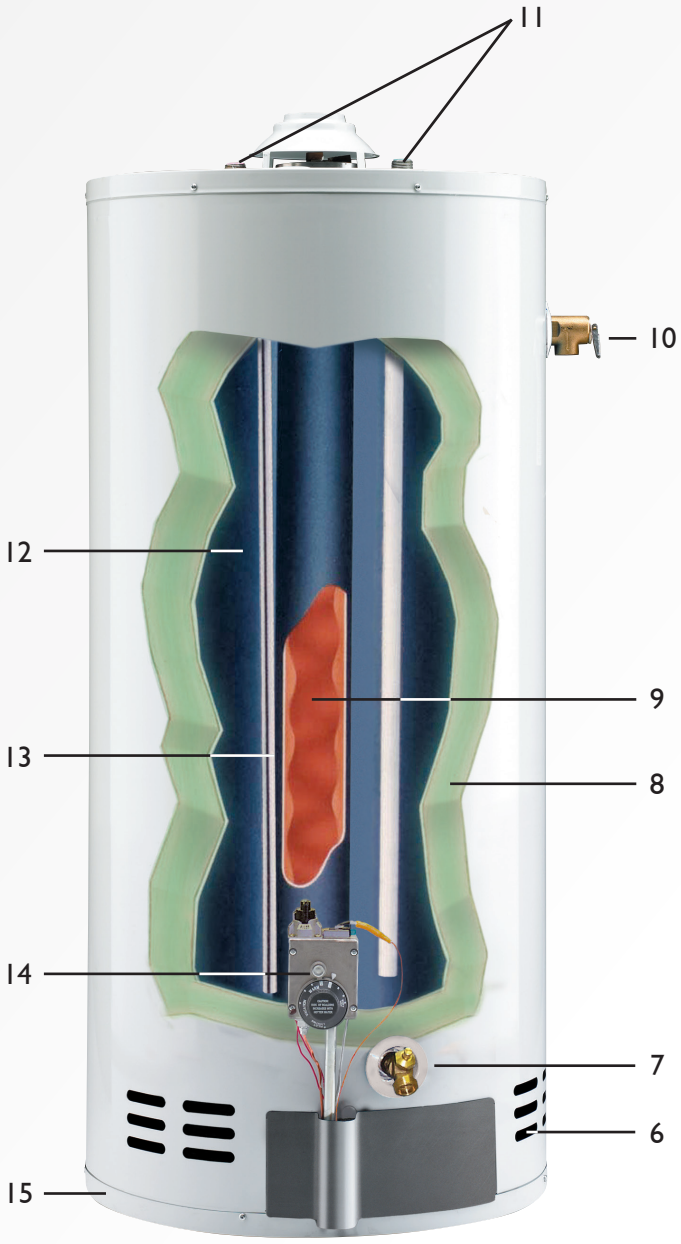

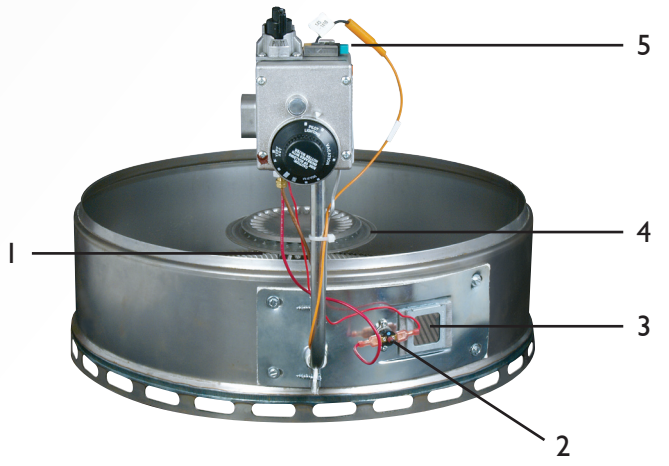

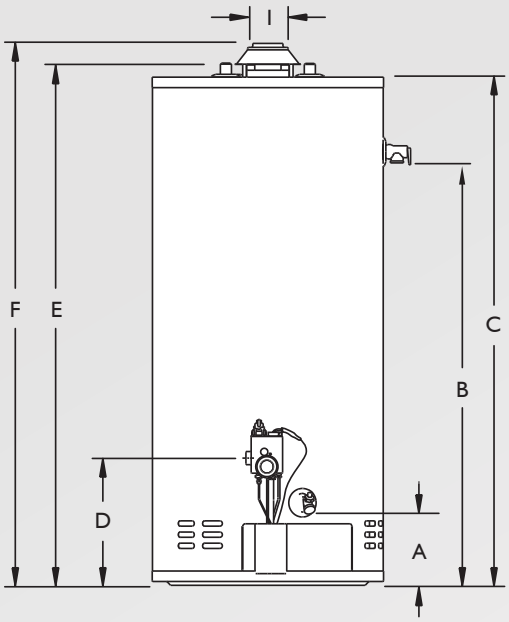

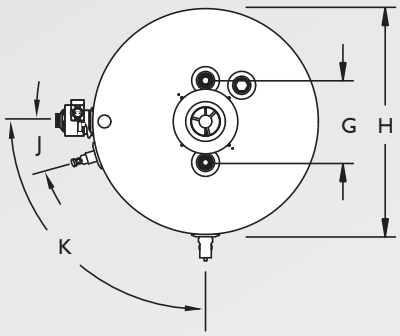

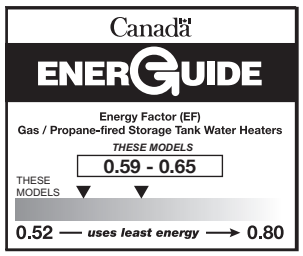

C US LOW LEAD CONTENT

SPECIFICATIONS

Models	Storage Capacity US (gal.)	Litre	Imp. (gal.)	Input BTU	Recovery 90°F/50°C US (gal.)	Litre	Imp. (gal.)	E.F. Number	Altitude	Est. ship. weight lb	(kg)
Natural Gas											
UG30-32MF1-N2U	30	114	25	32,000	34.5	130.5	28,7	0.64	N & H	124	(56)
UG40-34LF-N2U	40	151	33	34,000	35.7	135.2	29.7	0.62	N & H	146	(66)
UG40-38LF-N2U	40	151	33	38,000	40.9	155.0	34.1	0.62	N	146	(66)
UG50-38LF-N2U	50	189	42	38,000	39.9	151.1	33.2	0.61	N & H	167	(76)
UG50-40LF-N2U	50	189	42	40,000	42.6	161.1	35.4	0.61	N	167	(76)
UG60-45MF1-N2U	60	227	50	45,000	47.3	178.9	39.4	0.59	N & H	205	(93)
UG60-50MF1-N2U	60	227	50	50,000	52.5	198.8	43.7	0.59	N	205	(93)
Propane Gas											
UG30-30MF1-P2U	30	114	25	30,000	30	114	25	0.65	N & H	124	(56)
UG40-32LF-P2U	40	151	33	32,000	34.0	128.9	28.4	0.63	N & H	146	(66)
UG50-36LF-P2U	50	189	42	36,000	38.3	145.0	31.9	0.62	N & H	167	(76)
UG60-42MF1-P2U	60	227	50	42,000	44.7	169.2	37.2	0.61	N & H	205	(93)
UG60-47MF1-P2U	60	227	50	47,000	50.0	189.3	41.6	0.61	N	205	(93)
Convertible				N / LP	N / LP	N / LP		N / LP			
UG30-32MF1-C2U	30	114	25	32,000 / 30,000	34.5 / 30	130.5 / 114	28,7 / 25	0.64 / 0.65	N & H	124	(56)
UG50-38LF-C2U	50	189	42	38,000 / 36,000	40.4 / 38.3	153.1 / 144.9	33.7 / 31.9	0.61 / 0.62	N & H	168	(76)
UG60-45MF1-C2U	60	227	50	45,000 / 42,000	47.3 / 44.7	178.9 / 169.2	39.4 / 37.2	0.59 / 0.61	N & H	205	(93)

DIMENSIONS

Models	A inches	(cm)	B inches	(cm)	C inches	(cm)	D inches	(cm)	E inches	(cm)	F inches	(cm)	G inches	(cm)	H inches	(cm)	I inches	(cm)	J	K
All UG30	7 1/8	(18)	40	(102)	47 1/8	(120)	12 1/8	(31)	48 1/8	(124)	50 5/8	(128)	8	(20)	20	(51)	3	(8)	19.5°	90.0°
All UG40	7 1/8	(18)	40 1/16	(102)	48 3/8	(123)	12 1/8	(31)	49 7/8	(127)	51 5/8	(131)	8	(20)	22	(56)	3-4	(8-10)	17.5°	90.0°
All UG50	7 1/8	(18)	40 1/16	(102)	48 3/8	(123)	12 1/8	(31)	49 5/8	(126)	51 1/2	(131)	8	(20)	23 1/2	(60)	4	(10)	15.6°	90.0°
All UG60	7 1/8	(18)	48	(122)	58	(147)	12 1/8	(31)	59 1/2	(151)	61 1/4	(156)	8	(20)	24	(61)	4	(10)	15.6°	90.0°

All models are suitable for potable water and space heating applications.
Toxic chemicals, such as those used for boiler treatment, must NEVER be introduced into this system.
This unit must NEVER be connected to any existing heating system or component(s) previously used with a non-potable water heating appliance.

WARRANTY
6 years on inner tank | **6 years** on component parts

Giant offers a SIX (6)* year limited warranty against inner tank leakage from the date of installation. SIX (6)* year limited warranty on component parts. For more specific warranty details including exceptions, consult the owner's manual that comes with each water heater.
*When installed by a professional.

In accordance with our company policy of on-going product improvement, Giant Factories Inc. reserves the right to make changes without prior notice.

Giant® Enhancing everyday living

A family company since 1945.

40 Lesage Avenue, Montréal-East, Québec, Canada, H1B 5H3
Telephone: 514 645-8893 • Toll free: 1 800 363-9354
General fax: 514 640-0969
Customer Service fax: 514 645-8413

www.giantinc.com

© 2018 Giant Factories Inc. Printed in Canada